Asynt

ReactoMate

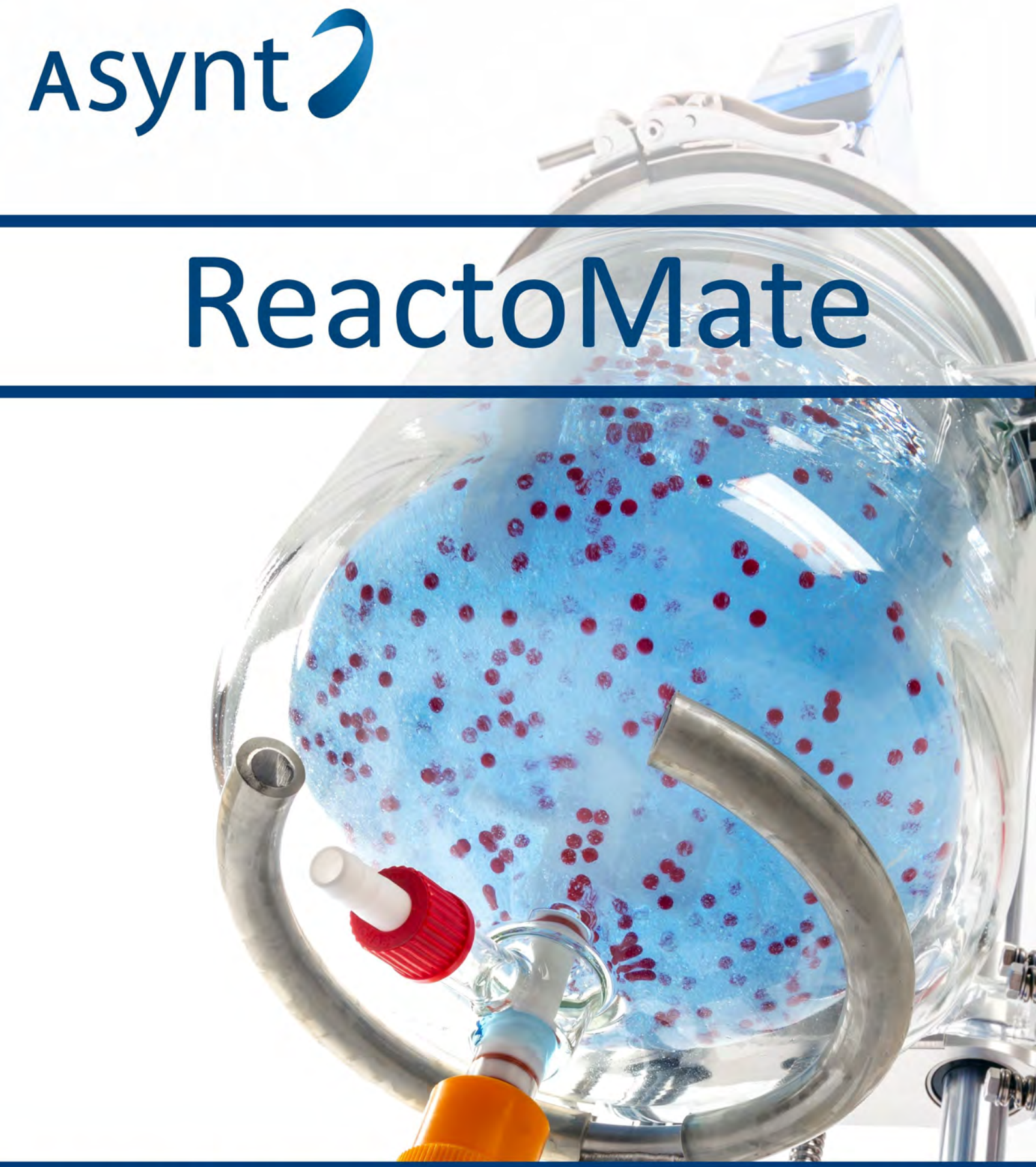

Complete Reactor Solutions from Benchtop to Pilot Scale

www.ReactoMate.com

ReactoMate Lab Reactors

Complete Reactor Solutions from Benchtop to Pilot Scale.

Designed by chemists for chemists, our new and improved range of ReactoMate setups offer complete flexibility when selecting a new reactor for your laboratory.

We appreciate that as your research evolves your equipment needs do too! This is why every ReactoMate vessel and support has been engineered with usability in mind; with a number of different options depending on your exact requirements.

With vessels ranging in size from 100ml to 30,000ml as standard, and a wide selection of optional accessories and upgrades available, there's a ReactoMate setup to suit every laboratory.



Key Features:

- Reaction vessels manufactured to order, from 100ml to 30,000ml as standard.
- Choice of support stands depending on your needs and requirements.
- Wide selection of accessories and upgrades available across all sizes.
- Fully customisable.
- Complete compatibility with all leading brands of overhead stirrer and temperature control systems.

> *Our new ReactoMate system is a great addition to the lab, allowing us to easily and safely scale-up our polymer synthesis.*
>
> **University of Liverpool , UK.**

5 Simple Steps to Choosing The Perfect ReactoMate for Your Lab:



1. Select your vessel.



2. Choose a ReactoMate support.



3. Add on any accessories that you require.



4. Pick out an overhead stirrer.



5. Select a temperature control system.

enquiries@asynt.com

The QUANTUM Support...

The entry-level stand of the ReactoMate range.

Vessels:
Compatible with a wide-range of vessels:
- single-jacketed up to 5,000ml
- double-jacketed up to 3,000ml



Overhead Stirrer Bosshead:
Provides a sturdy support and is compatible with all leading brands of overhead stirrer!





Support Beams:
A pair of 24 mm, heavy-duty, stainless steel support beams sit over and lock into position on the two vertical rods of the QUANTUM support. Holding the neck clamp and bottom support in place, the support beams provide stability for your reaction vessel.

Neck Clamp:
Lined with a heat-resistant covering, the neck clamp secures your vessel into the top support beam.
Available for vessels with a DN60, DN100, DN150 or DN200 flange.





Materials of Construction:
Made from aluminium and stainless steel, the QUANTUM support has a heavy-duty base and 2 x 18mm rods (working height up to 106cm) providing a stable and sturdy framework for your reaction vessel.

Adjustable Feet:
All four feet are fully adjustable to allow you to level the QUANTUM support on any surface.
Footprint (W x D): 40cm x 32cm

enquiries@asynt.com

The DATUM Support...

The all-round stand for laboratory scale reactions.



Designed with user-friendliness in mind, the numerous innovative features of the ReactoMate DATUM support make it the ideal addition to your laboratory. Suitable for vessels up to 5,000ml, the ReactoMate DATUM support allows you to replace multiple reactor setups with one versatile and reliable system!





Constructed from the highest quality stainless steel and anodised aluminium, the dual-rod design provides a sturdy and compact reaction station for your laboratory. Low-friction polymer bearings line both the overhead stirrer alignment chuck and the neck support to ensure a smooth and easy operation, whilst the design of the neck clamp makes changing vessels as simple as 'Clip & Click'.

With a wide range of accessories and upgrades available, including quick-release couplings and drain manifolds, the ReactoMate DATUM support is the perfect all-rounder for laboratory scale reactions.

See for yourself just how quick & easy it is to set up the ReactoMate DATUM support ready for chemistry.

Changing a vessel is as simple as 'Clip & Click':



① Place the **CLIP** around the neck of your vessel.



② **CLICK** this setup into the support system.

SPECIFICATIONS

Frame Height:	117 cm
Frame Width:	44 cm
Frame Depth:	40 cm
Vessel Sizes:	Up to 5,000ml (single jacket)
	Up to 3,000ml (double jacket)
Flange Sizes:	DN60 & DN100

enquiries@asynt.com

The DATUM Support...

The all-round stand for laboratory scale reactions.

Clip & Click Vessel Support System:
The two-part clip & click vessel support system is cleverly designed to hold all of the weight of your reaction vessel and negate the need for a bottom support. Low friction polymer bearings line the support system to ensure smooth manoeuvrability of your vessel.



The vessel clip fastens securely around the neck of the reactor and is offered in either a DN60 or a DN100 size. Also available individually, we recommend leaving the clip attached to your vessel for extra fast reactor changes.



Drip Tray:
Moulded to fit perfectly within the feet of the DATUM support, the polyethylene drip tray will catch any drips and spills from your reactor during draining.

Vessels:
Compatible with a wide-range of vessels:
- single-jacketed up to 5,000ml
- double-jacketed up to 3,000ml



Overhead Stirrer Alignment Chuck:
Allows you to simply and quickly re-align your overhead stirrer after vessel changes. Compatible with leading brands of overhead stirrer.



Locking Rings:
Two locking rings sit below each of the overhead stirrer chuck and vessel support to provide an extra element of protection and help re-position each part of the DATUM following vessel changes.



Adjustable Feet:
Allow you to level the DATUM support within your fumehood, providing stability and security whilst you work.

enquiries@asynt.com

The ATOM Support...

The complete stand for all of your scale-up needs.



Capable of holding any sized vessel up to 30,000ml, the ReactoMate ATOM Support has been designed to provide everything you need when scaling-up processes in your laboratory.

Suitable for use in both walk-in and bench-top fume cupboards, the height of the ATOM Support can simply and effortlessly be adjusted at the turn of a handle, whilst the compact footprint allows the use of larger vessels even in confined spaces.





Easily raise vessels for draining, or lower vessels for safer loading with the ATOMs unique, built-in, drive mechanism.

With a number of optional design features, including lockable castors and drip-trays, the ReactoMate ATOM Support is fully customisable to suit your needs and requirements. So whether you're looking to conduct small-scale investigatory experiments or mimic larger scale manufacturing procedures the ReactoMate ATOM support is fully equipped to do it all.

Distillation Accessories for Process Vessels:

Our ReactoMate reflux divider kits allow you to upgrade your ATOM support to allow distillation directly from your reaction vessel.

The reflux divider head sits in your reactor lid and can be configured to condense vapour back into your reaction vessel or into a separate collection flask.

REFLUX DIVIDER KITS INCLUDE:

- Reflux divider head
- Optional high capacity reflux condenser
- A choice of collection flask (1L, 2L, 5L or 10L)
- Glassware connectors and adapters
- All bossheads and clamps.

SPECIFICATIONS

Frame Height:	Variable*
Frame Width:	58 cm
Frame Depth:	58 cm
Vessel Sizes:	Up to 30,000ml (single jacket)
	Up to 20,000ml (double jacket)
Flange Sizes:	DN60, DN100, DN150 & DN200

**Dependant upon size of vessel used, maximum vessel size required & ATOM configuration employed.*

enquiries@asynt.com

The ATOM Support...

The complete stand for all of your scale-up needs.

Vessels:
Compatible with all standard vessels:
- single-jacketed up to 30,000ml
- double-jacketed up to 20,000ml



Overhead Stirrer Alignment Chuck:
Allows you to simply and quickly re-align your overhead stirrer in-between vessel changes.



Open Frame Design:
Supporting the vessel weight on a mechanical lifting drive allows for a slim-line framework, giving you unhindered access to every part of your reactor setup.

Neck Clamp:
Provided with a DN200 neck clamp as standard, optionally available for DN60, DN100 and DN150.

Bottom Support Ring:
Sits below your vessel and provides additional support to the neck clamp - essential for larger vessels!

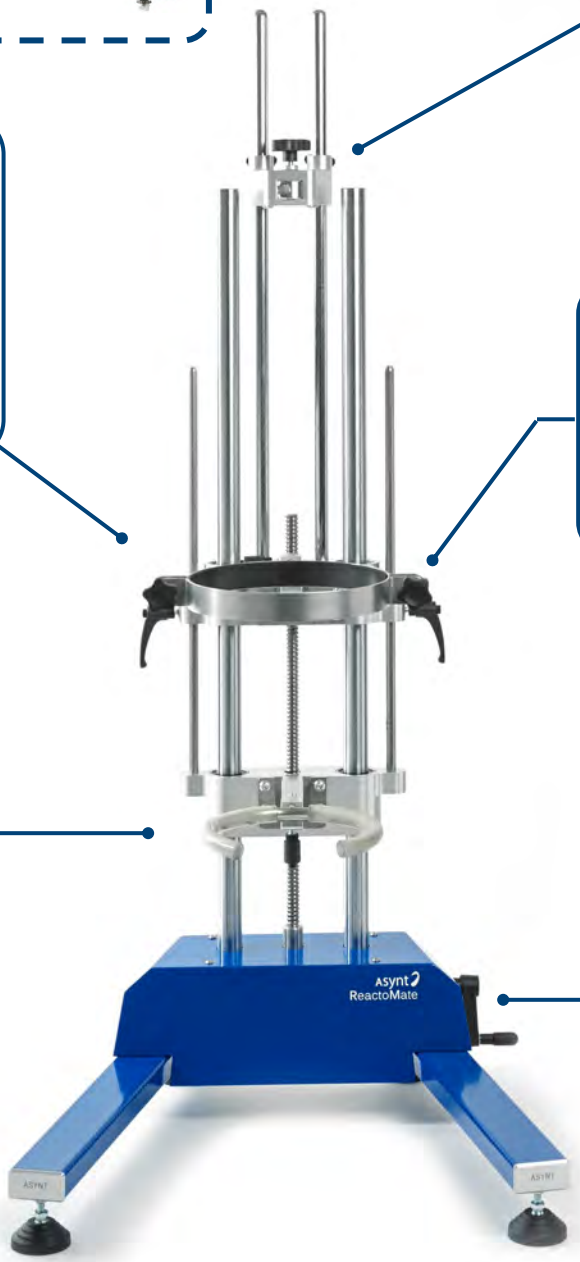

Lifting Mechanism:
A mechanical lifting handle allows you to quickly and easily raise and lower your reaction vessels with just one hand! Perfect for adjusting the height of your reactor for both loading and draining.





Adjustable Feet:
Allow you to level the ATOM support on your work surface. Alternatively the four feet can be exchanged for lockable castors, for complete manoeuvrability.

Adjustable Frame Height:
Makes the ATOM support ideal for use in both standard and walk-in fumehoods.

enquiries@asynt.com



Asynt

www.ReactoMate.com

29 Hall Barn Road Industrial Estate, Isleham,

Cambridgeshire, CB7 5RJ, United Kingdom

T: +44 (0)1638 781 709

E: enquiries@asynt.com